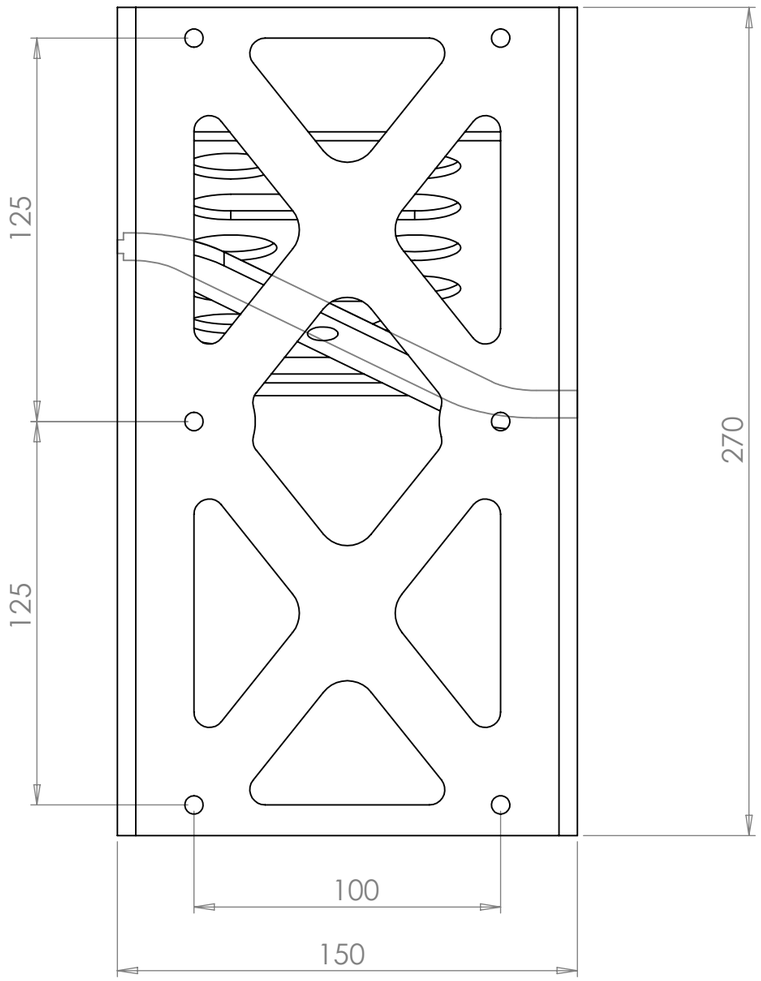

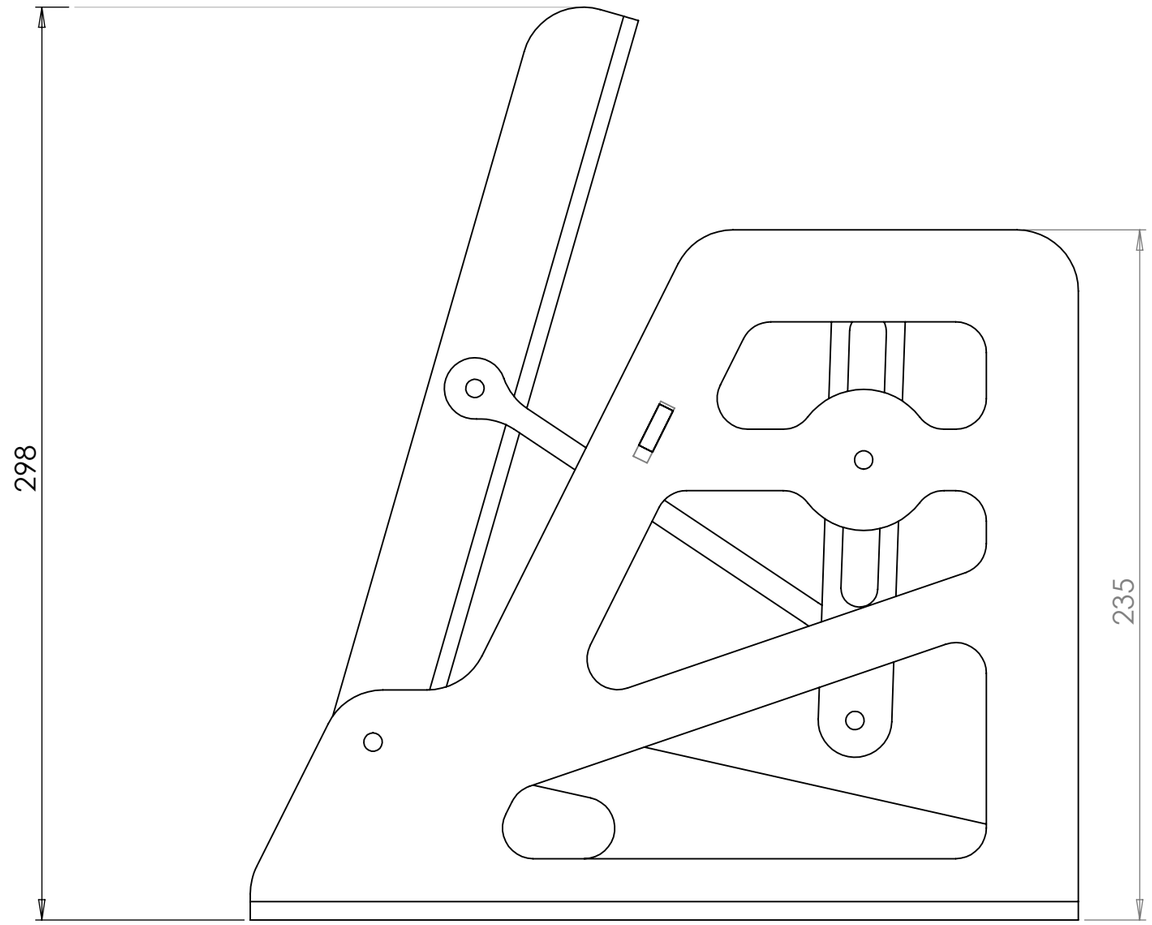

20th august 2011	atec Engineering
All sizes in mm and for reference only	